AERON®

Product Catalogue 07 sec 01

Cabin Units and Air Diffusors

AF GRUPPEN Offshore AERONMOLLIER

Phone: +47 38 32 78 00
E-mail: adm.aeronmollier@afgruppen.no
www.aeronmollier.no

INDEX

Air Terminals 1

Aeron Cabin Unit Standard 2

Aeron Cabin Unit Special 3

Aeron Cabin Unit ACU1 - 30C 4

Aeron Cabin Unit ACU1 - 50C 7

Aeron Cabin Unit ACU1 - 30F 10

Aeron Cabin Unit ACU1 - 50F 13

Right to alterations reserved

AERON CABIN UNIT

Aeron Cabin Units are designed for use in high speed marine air-conditioning systems. Their task is to control the air flow, its distribution and temperature. The units are tested in a special laboratory for optimum performance and sound attenuation.

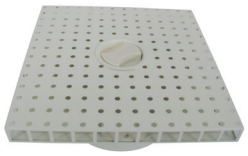

We have a comprehensive range of Cabin units. The range contains 1-pipe units for wall mounting or ceiling suspension, also units with electrical reheat are available. Air diffusers for the ceiling cabin units are available in square and circular shapes to fit ceiling panels. For manual operation the units come with an air volume control device. For constant air flow and regulation of temperature a special room thermostat is available. Aeron Cabin Diffusers can be delivered in any color in order to blend in with ship interior.

Aeron Cabin Units are manufactured in galvanized sheet steel, insulated with mineral wool. Standard color on the diffuser is white (RAL 9010). Optional color is steel (RAL 9006)

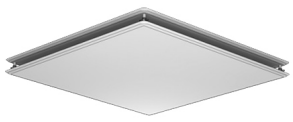

DESCRIPTION

The 1-pipe unit provides an air flow with constant temperature, with possibility of regulation on the air flow. The basic temperature is set by the heating coil in the air handling unit. If the cabin unit is equipped with electrical heating element, the temperature can be increased above this basic temperature, controlled by a local room thermostat.

CERTIFICAT ES

Aeron Cabin Unit type ACU1-30C and ACU1-50C are approved by DNV for use in class B-15 ceiling

Right to alterations reserved

Art no:	Diffusor type	Art. Description
		1 PIPE CEILING SYSTEMS
ACU1-30C	Square	Aeron Cabin Unit, 1 pipe, Inlet 100, Outlet 200, Ceiling, Regulating
ACU1-50C	Square	Aeron Cabin Unit, 1 pipe, Inlet 125, Outlet 315, Ceiling, Regulating
		1 PIPE CEILING SYSTEMS WITH EL-HEAT
ACU1-30C-500W	Square	Aeron Cabin Unit, 1 pipe, Inlet 100, Outlet 200, Ceiling, Regulating, Heat 500 W
ACU1-30C-1000W	Square	Aeron Cabin Unit, 1 pipe, Inlet 100, Outlet 200, Ceiling, Regulating, Heat 1000 W
ACU1-50C-1000W	Square	Aeron Cabin Unit, 1 pipe, Inlet 125, Outlet 315, Ceiling, Regulating, Heat 1000 W
ACU1-50C-1500W	Square	Aeron Cabin Unit, 1 pipe, Inlet 125, Outlet 315, Ceiling, Regulating, Heat 1500 W
		1 PIPE FLOOR SYSTEMS
ACU1-30F	Top	Aeron Cabin Unit, 1 pipe, Inlet 100, Top outlet, Floor, Regulating
ACU1-50F	Top	Aeron Cabin Unit, 1 pipe, Inlet 125, Top outlet, Floor, Regulating
		1 PIPE FLOOR SYSTEMS WITH EL-HEAT
ACU1-30F-500W	Top	Aeron Cabin Unit, 1 pipe, Inlet 100, Top outlet, Floor, Regulating, Heat 500 W
ACU1-50F-1500W	Top	Aeron Cabin Unit, 1 pipe, Inlet 125, Top outlet, Floor, Regulating, Heat 1500 W

Right to alterations reserved

Art no:	Diffusor type	Art. Description
		1 PIPE CEILING SYSTEMS
ACU1-30C-CD	Circular	Aeron Cabin Unit, 1 pipe, Inlet 100, Outlet 200, Ceiling, Regulating
ACU-50C-CD	Circular	Aeron Cabin Unit, 1 pipe, Inlet 125, Outlet 315, Ceiling, Regulating
		1 PIPE CEILING SYSTEMS WITH EL-HEAT
ACU1-30C-500W-CD	Circular	Aeron Cabin Unit, 1 pipe, Inlet 100, Outlet 200, Ceiling, Regulating, Heat 500 W
ACU1-30C-1000W-CD	Circular	Aeron Cabin Unit, 1 pipe, Inlet 100, Outlet 200, Ceiling, Regulating, Heat 1000 W
ACU1-50C-1000W-CD	Circular	Aeron Cabin Unit, 1 pipe, Inlet 125, Outlet 315, Ceiling, Regulating, Heat 1000 W
ACU1-50C-1500W-CD	Circular	Aeron Cabin Unit, 1 pipe, Inlet 125, Outlet 315, Ceiling, Regulating, Heat 1500 W
		1 PIPE, CEILING SYSTEMS WITH NO REGULATION
ACU1-30C-N	Square	Aeron Cabin Unit, 1 pipe, Inlet 100, Outlet 200, Ceiling
ACU1-50C-N	Square	Aeron Cabin Unit, 1 pipe, Inlet 125, Outlet 315, Ceiling
ACU1-30C-N-CD	Circular	Aeron Cabin Unit, 1 pipe, Inlet 100, Outlet 200, Ceiling
ACU1-50C-N-CD	Circular	Aeron Cabin Unit, 1 pipe, Inlet 125, Outlet 315, Ceiling
		1 PIPE, CEILING SYSTEM WITH HEAT AND NO REGULATION
ACU1-30C-N-500W	Square	Aeron Cabin Unit, 1 pipe, Inlet 100, Outlet 200, Ceiling, Heat 500 W
ACU1-30C-N-1000W	Square	Aeron Cabin Unit, 1 pipe, Inlet 100, Outlet 200, Ceiling, Heat 1000 W
ACU1-50C-N-1000W	Square	Aeron Cabin Unit, 1 pipe, Inlet 125, Outlet 315, Ceiling, Heat 1000 W
ACU1-50C-N-1500W	Square	Aeron Cabin Unit, 1 pipe, Inlet 125, Outlet 315, Ceiling, Heat 1500 W
ACU1-30C-N-500W-CD	Circular	Aeron Cabin Unit, 1 pipe, Inlet 100, Outlet 200, Ceiling, Heat 500 W
ACU1-30C-N-1000W-CD	Circular	Aeron Cabin Unit, 1 pipe, Inlet 100, Outlet 200, Ceiling, Heat 1000 W
ACU1-50C-N-1000W-CD	Circular	Aeron Cabin Unit, 1 pipe, Inlet 125, Outlet 315, Ceiling, Heat 1000 W
ACU1-50C-N-1500W-CD	Circular	Aeron Cabin Unit, 1 pipe, Inlet 125, Outlet 315, Ceiling, Heat 1500 W

Right to alterations reserved

AERON CABIN UNIT ACU1 - 30C

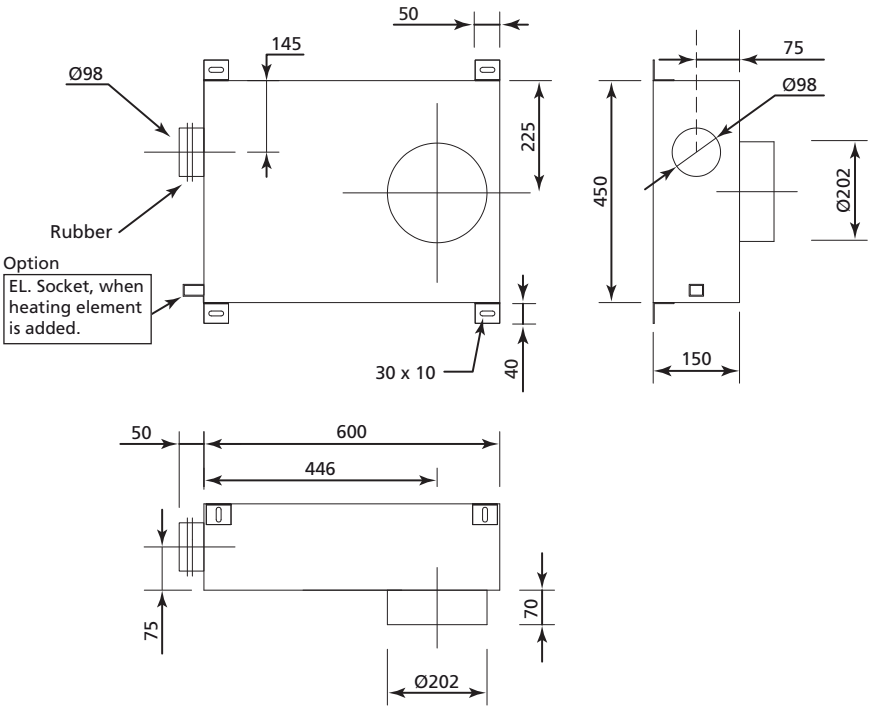

Cabin unit ACU1 - 30C with ACU - SD 200 Diffuser

CABIN UNIT ACU1 - 30C	
Description:	Single pipe unit for mounting above panelled ceiling
Material:	Galvanized sheet steel
Insulation:	Rockwool
Connection:	Ø100 mm
Recommended airflow:	75 – 250 m^3/h

ALTERNATIVES	
ACU1-30C	Aeron Cabin Unit, 1 Pipe, Inlet 100, Outlet 200, Ceiling, Regulating, Weight 8,75 kg
ACU1-30C – 500W	Aeron Cabin Unit, 1 Pipe, Inlet 100, Outlet 200, Ceiling, Regulating, Heat 500 W, Weight 9,75 kg
ACU1-30C – 1000W	Aeron Cabin Unit, 1 Pipe, Inlet 100, Outlet 200, Ceiling, Regulating, Heat 1000 W, Weight 11,25 kg

MATCHING DIFFUSER	
ACU - SD 200	Square diffuser, Adjustable
ACU - SDN 200	Square diffuser, Non-adjustable
ACU - CD 200	Circular diffuser, Adjustable
ACU - CDN 200	Circular diffuser, Non-adjustable

DIFFUSER COLOUR		
Steel	RAL 9006	
White	RAL 9010	Standard colour

Right to alterations reserved

STORAGE

The Aeron Cabin Units must be stored in a dry place, and not exposed to humidity.
The units are insulated with Rockwool, and if they are exposed to humidity the insulation may get damp.

If a unit equipped with an electrical heating element is exposed to humidity, the risk for earth fault occurs.

DET NORSKE VERITAS

TYPE APPROVAL CERTIFICATE

CERTIFICATE NO. F-19219
This Certificate consists of 3 pages

This is to certify that the
Class B Recesses for Light Fittings, Ventilation Units and similar

with type designation(s)
Cabin Unit Type ACU

Manufactured by
Aeron AS
FLEKKEFJORD, Norway

is found to comply with
Det Norske Veritas' Offshore Standards
Det Norske Veritas' Rules for Classification of Ships
Det Norske Veritas' Interpretation of SOLAS 1974 Convention as Amended

Application
Light fittings approved for use in class B-15 ceiling

Place and date
Høvik, 2011-10-31
This Certificate is valid until
2014-12-31

For DET NORSKE VERITAS AS
Petter Langtjes
Head of Section

Local Office
DNV Stavanger

Marius Mørner
Surveyor

Notice: This Certificate is subject to terms and conditions overleaf. Any significant change in design or construction may render this Certificate invalid.
The validity date relates to the Type Approval Certificate and not to the approval of equipment/systems installed.

DET NORSKE VERITAS AS · VERITASVEIEN 1, 1322 HØVIK, NORWAY · TEL: (+47) 67 57 99 00 · FAX: (+47) 67 57 99 11
Form No.: 20.90a Issue: January 98 Page 1 of 3

INSTALLATION

Aeron cabin Unit ACU1-C is designed for easy and quick installation in false ceilings. The Cabin Unit will be delivered according to IMO resolution A.754 (18) for false ceilings including fire resistance rating B15, and is approved by DNV – Det Norske Veritas.
The units also satisfies the Comfort Class requirements for noise, vibrations and indoor climate from DNV.

The installation must be done according to Aeron procedure.

ELECTRICAL CONNECTION

This applies only for cabin units with an electrical heating element.
Power supply; 1 ph 230V AC
The electrical heating element must be interlocked to a running signal from the air handling unit.

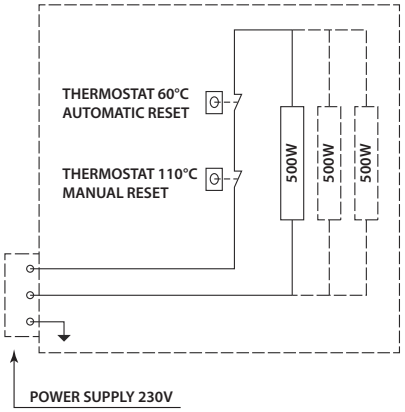

Cabin units equipped with electrical heating elements have an Overheat thermostat and a Fire Thermostat.
The overheat thermostat are fixed at 60°C with automatic reset
The fire thermostat are fixed at 110°C with manual reset.
The manual reset is described in a separate procedure.

Right to alterations reserved

AIR FLOW RATE MEASUREMENT

Table 1 gives k-factors for measurement of air flow rates according to the formula:

$$q = k \cdot \sqrt{\Delta p}$$

Where q = air flow rate [m³/h]
Δp = Pressure difference between tube and surrounding air [Pa]

	k
ACU1-30C	45

Table 1, k-factor for air flow rate measurements

NOISE LEVELS

Diagram 1 give total pressure loss as function of air flow rate. The dB(A)-curves represent noise from outlet including diffuser -
expressed by sound pressure levels at 4 dB sound absorption in all frequencies. All data are measured in accordance with ISO 5135.

Table 2 gives factors to be added to the diagram dB(A)-value in order to calculate octave band sound power levels from the unit. The factors are to be interpolated between left and right lines in the diagrams (heavy throttled and open unit).

	Left end of noise curves (heavy throttled) (heavy throttled)							Right end of noise curves (open unit) (open unit)						
Hz	125	250	500	1k	2k	4k	8k	125	250	500	1k	2k	4k	8k
ACU1-30C	6	0	-4	-5	-7	-2	-1	9	5	1	-1	-7	-14	-22

Table 2, factors for calculating octave band sound power levels

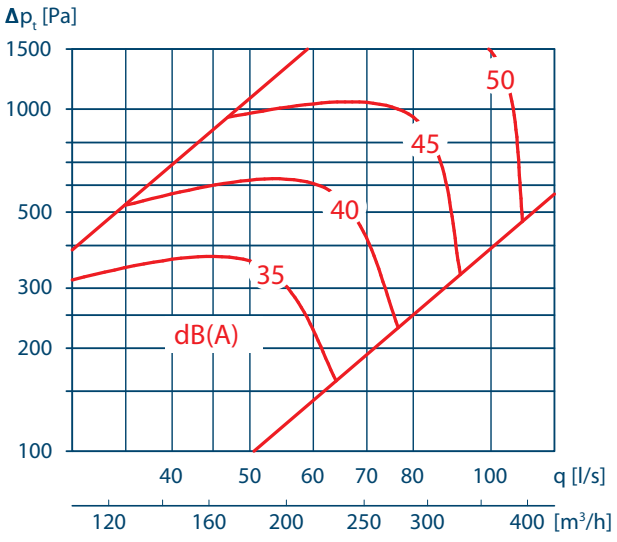

Diagram 1, ACU1-30C

SOUND ATTENUATION

Table 3 gives sound transmission loss defined as reduction in sound power level (dB) propagated from the inlet duct into a cabin due to the insertion of the cabin unit and diffuser. The end reflection loss is included. The values are valid for open damper and are measured in accordance with ISO 7235/ NT ACOU 105.

Hz	125	250	500	1k	2k	4k	8k
ACU1-30C	20	21	27	32	33	18	11

Table 3, sound attenuation

Right to alterations reserved

AERON CABIN UNIT ACU1 - 50C

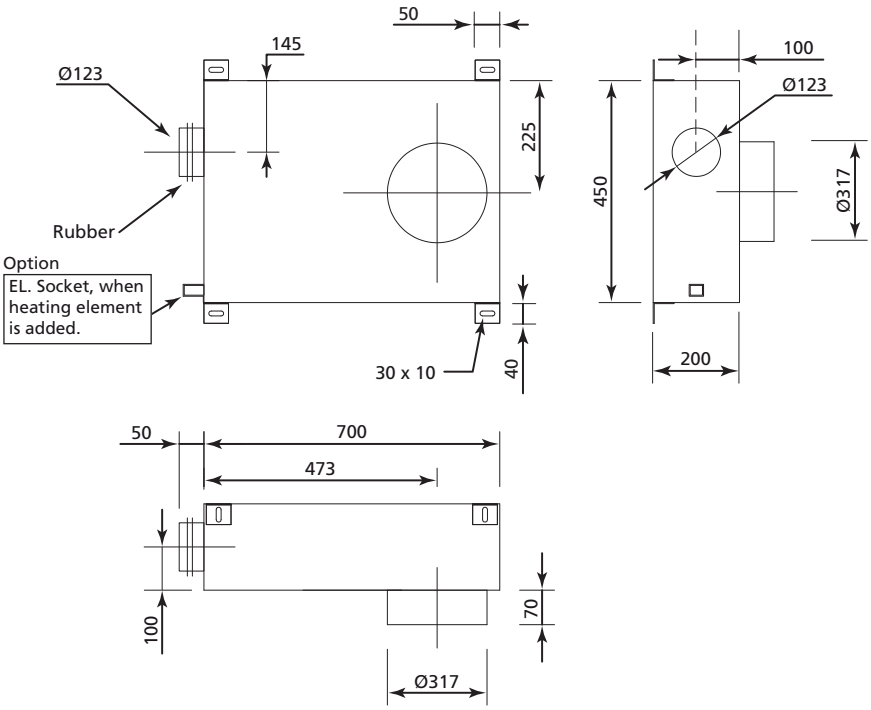

Cabin unit ACU1 - 50C with ACU - SD 315 Diffuser

CABIN UNIT ACU1 - 50C	
Description:	Single pipe unit for mounting above panelled ceiling
Material:	Galvanized sheet steel
Insulation:	Rockwool
Connection:	Ø125 mm
Recommended airflow:	200 – 400 m^3/h

ALTERNATIVES	
ACU1-50C	Aeron Cabin Unit, 1 Pipe, Inlet 125, Outlet 315, Ceiling, Regulating, Weight 10,85 kg
ACU1-50C - 1000W	Aeron Cabin Unit, 1 Pipe, Inlet 125, Outlet 315, Ceiling, Regulating, Heat 1000 W, Weight 11,80 kg
ACU1-50C - 1500W	Aeron Cabin Unit, 1 Pipe, Inlet 125, Outlet 315, Ceiling, Regulating, Heat 1500 W, Weight 11,90 kg

MATCHING DIFFUSER	
ACU - SD 315	Square diffuser, Adjustable
ACU - SDN 315	Square diffuser, Non-adjustable
ACU - CD 315	Circular diffuser, Adjustable
ACU - CDN 315	Circular diffuser, Non-adjustable

DIFFUSER COLOUR		
Steel	RAL 9006	
White	RAL 9010	Standard colour

Right to alterations reserved

STORAGE

The Aeron Cabin Units must be stored in a dry place, and not exposed to humidity.
The units are insulated with Rockwool, and if they are exposed to humidity the insulation may get damp.
If a unit equipped with an electrical heating element is exposed to humidity, the risk for earth fault occurs.

DET NORSKE VERITAS
TYPE APPROVAL CERTIFICATE

CERTIFICATE NO. F-19219
This Certificate consists of 3 pages

This is to certify that the
Class B Recesses for Light Fittings, Ventilation Units and similar

with type designation(s)
Cabin Unit Type ACU

Manufactured by
Aeron AS
FLEKKEFJORD, Norway

is found to comply with
Det Norske Veritas' Offshore Standards
Det Norske Veritas' Rules for Classification of Ships
Det Norske Veritas' Interpretation of SOLAS 1974 Convention as Amended

Application
Light fittings approved for use in class B-15 ceiling

Place and date
Høvik, 2011-10-31
for DET NORSKE VERITAS AS
Petter Langøes
Head of Section

Local Office
DNV Stavanger

This Certificate is valid until
2014-12-31
Marius Mørner
Surveyor

Notice: This Certificate is subject to terms and conditions overleaf. Any significant change in design or construction may render this Certificate invalid.
The validity date relates to the Type Approval Certificate and not to the approval of equipment/systems installed.

DET NORSKE VERITAS AS · VERITASVEIEN 1, 1322 HØVIK, NORWAY · TEL: (+47) 67 57 99 00 · FAX: (+47) 67 57 99 11
Form No.: 20.90a Issue: January 98 Page 1 of 3

INSTALLATION

Aeron cabin Unit ACU1-C is designed for easy and quick installation in false ceilings. The Cabin Unit will be delivered according to IMO resolution A.754 (18) for false ceilings including fire resistance rating B15, and is approved by DNV – Det Norske Veritas.
The units also satisfies the Comfort Class requirements for noise, vibrations and indoor climate from DNV.

The installation must be done according to Aeron procedure.

ELECTRICAL CONNECTION

This applies only for cabin units with an electrical heating element.
Power supply; 1 ph 230V AC
The electrical heating element must be interlocked to a running signal from the air handling unit.

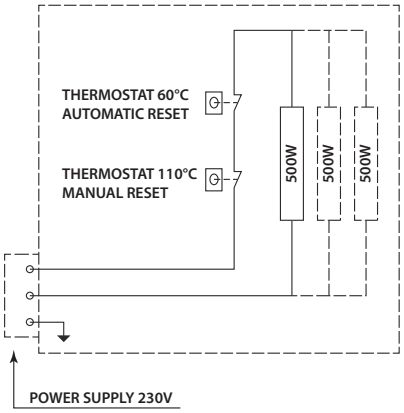

Cabin units equipped with electrical heating elements have an Overheat thermostat and a Fire Thermostat.
The overheat thermostat are fixed at 60°C with automatic reset
The fire thermostat are fixed at 110°C with manual reset.
The manual reset is described in a separate procedure.

Right to alterations reserved

AIR FLOW RATE MEASUREMENT

Table 1 gives k-factors for measurement of air flow rates according to the formula:

$$q = k \cdot \sqrt{\Delta p}$$

Where q = air flow rate [m³/h]
Δp = Pressure difference between tube and surrounding air [Pa]

	k
ACU1–50C	82

Table 1, k-factor for air flow rate measurements

NOISE LEVELS

Diagram 1 give total pressure loss as function of air flow rate. The dB(A)-curves represent noise from outlet including diffuser -
expressed by sound pressure levels at 4 dB sound absorption in all frequencies. All data are measured in accordance with ISO 5135.

Table 2 gives factors to be added to the diagram dB(A)-value in order to calculate octave band sound power levels from the unit. The factors are to be interpolated between left and right lines in the diagrams (heavy throttled and open unit).

	Left end of noise curves (heavy throttled) (heavy throttled)							Right end of noise curves (open unit) (open unit)						
Hz	125	250	500	1k	2k	4k	8k	125	250	500	1k	2k	4k	8k
ACU1-50C	5	0	-6	-7	-5	-1	-2	8	7	1	-2	-6	-12	-15

Table 2, factors for calculating octave band sound power levels

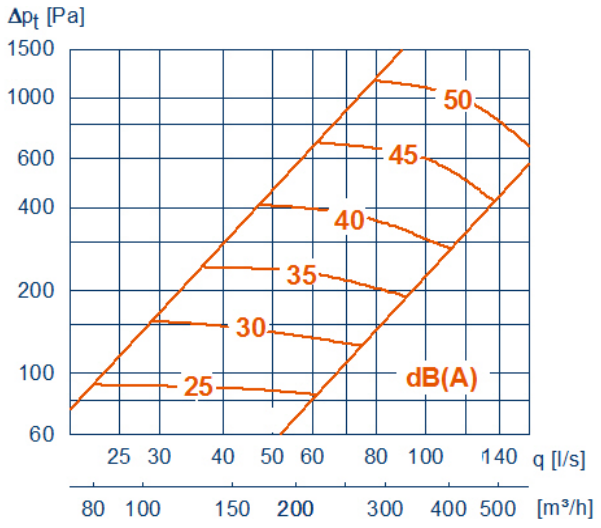

Diagram 1, ACU1-50C

SOUND ATTENUATION

Table 3 gives sound transmission loss defined as reduction in sound power level (dB) propagated from the inlet duct into a cabin due to the insertion of the cabin unit and diffuser. The end reflection loss is included. The values are valid for open damper and are measured in accordance with ISO 7235/ NT ACOU 105.

Hz	125	250	500	1k	2k	4k	8k
ACU1-50C	16	19	24	33	32	30	16

Table 3, sound attenuation

Right to alterations reserved

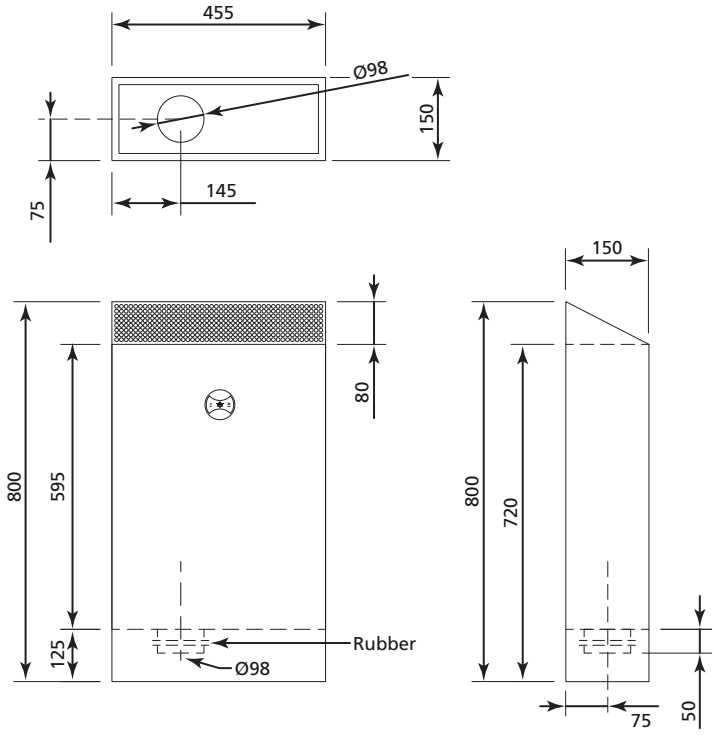

Cabin Unit ACU1 - 30F

CABIN UNIT ACU1 - 30F		
Description:	Single pipe unit for wall mounting	
Material:	Galvanized sheet steel	
Insulation:	Rockwooll	
Connection:	Ø100 mm	
Recommended airflow:	75 – 250 m^3/h	

ALTERNATIVES		
ACU1-30F	Aeron Cabin Unit, 1 Pipe, Inlet 100, Top outlet, Floor, Regulating, Weight 14,10 kg	
ACU1-30F - 500W	Aeron Cabin Unit, 1 Pipe, Inlet 100, Top outlet, Floor, Regulating, Heat 500 W, Weight 14,50 kg	
ACU1-30F - 1000W	Aeron Cabin Unit, 1 Pipe, Inlet 100, Top outlet, Floor, Regulating, Heat 1000 W, Weight 14,70 kg	

COLOUR UNIT		
Steel	RAL 9006	
White	RAL 9010	Standard colour

Right to alterations reserved

STORAGE

The Aeron Cabin Units must be stored in a dry place, and not exposed to humidity.
The units are insulated with Rockwool, and if they are exposed to humidity the insulation may get damp.

If a unit equipped with an electrical heating element is exposed to humidity, the risk for earth fault occurs.

INSTALLATION

Aeron cabin Unit ACU1-F is designed for mounting on the floor, close to a wall or other similar support.
All the mounting must be done according to Aeron procedure.

ELECTRICAL CONNECTION

This applies only for cabin units with an electrical heating element.
Power supply; 1 ph 230V AC
The electrical heating element must be interlocked to a running signal from the air handling unit.

Cabin units equipped with electrical heating elements have an Overheat thermostat and a Fire Thermostat.
The overheat thermostat are fixed at 60°C with automatic reset
The fire thermostat are fixed at 110°C with manual reset. The manual reset is described in a separate procedure.

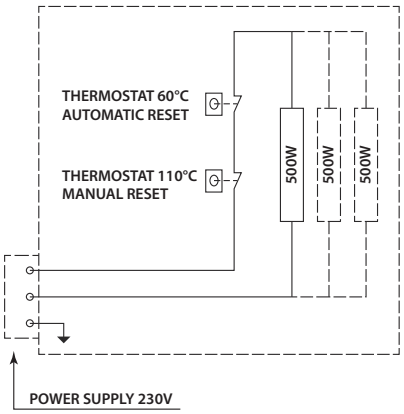

Right to alterations reserved

AIR FLOW RATE MEASUREMENT

The airflow to be measured by an anemometer at top grille or in duct below the wall unit.

NOISE LEVELS

Diagram 1 give total pressure loss as function of air flow rate. The dB(A)-curves represent noise from outlet including diffuser -
expressed by sound pressure levels at 4 dB sound absorption in all frequencies. All data are measured in accordance with ISO 5135.

Table 2 gives factors to be added to the diagram dB(A)-value in order to calculate octave band sound power levels from the unit. The factors are to be interpolated between left and right lines in the diagrams (heavy throttled and open unit).

	Left end of noise curves (heavy throttled) (heavy throttled)							Right end of noise curves (open unit) (open unit)						
Hz	125	250	500	1k	2k	4k	8k	125	250	500	1k	2k	4k	8k
ACU1–30F	1	0	0	-3	-4	-3	-5	5	4	4	-1	-10	-14	-19

Table 2, factors for calculating octave band sound power levels

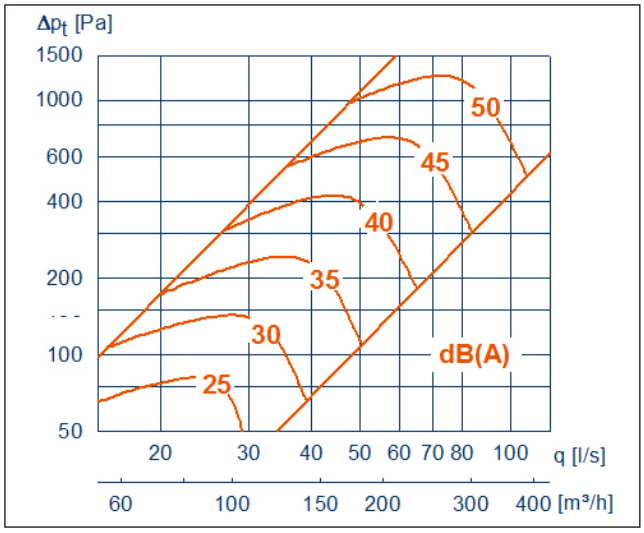

Diagram 1, ACU1–30F

SOUND ATTENUATION

Table 3 gives sound transmission loss defined as reduction in sound power level (dB) propagated from the inlet duct into a cabin due to the insertion of the cabin unit and diffuser. The end reflection loss is included. The values are valid for open damper and are measured in accordance with ISO 7235/ NT ACOU 105

Hz	125	250	500	1k	2k	4k	8k
ACU1–30F	20	16	17	27	29	25	16

Table 3, sound attenuation

Right to alterations reserved

AERON CABIN UNIT ACU1 - 50F

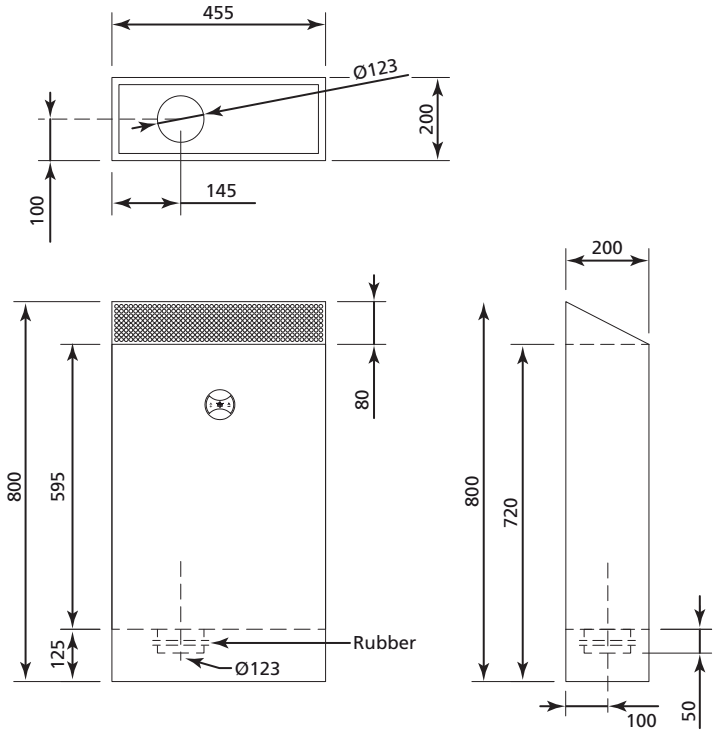

Cabin Unit ACU1 - 50F

CABIN UNIT ACU1 - 50F	
Description:	Single pipe unit for wall mounting
Material:	Galvanized sheet steel
Insulation:	Rockwool
Connection:	Ø125 mm
Recommended airflow:	200 – 400 m^3/h

ALTERNATIVES	
ACU1 - 50F	Aeron Cabin Unit, 1 Pipe, Inlet 125, Top outlet, Floor, Regulating, Weight 15,55 kg
ACU1 - 50F - 1000W	Aeron Cabin Unit, 1 Pipe, Inlet 125, Top outlet, Floor, Regulating, Heat 1000W, Weight 16,00 kg
ACU1 - 50F - 1500W	Aeron Cabin Unit, 1 Pipe, Inlet 125, Top outlet, Floor, Regulating, Heat 1500W, Weight 16,45 kg

COLOUR UNIT		
Steel	RAL 9006	
White	RAL 9010	Standard colour

Right to alterations reserved

STORAGE

The Aeron Cabin Units must be stored in a dry place, and not exposed to humidity.
The units are insulated with Rockwool, and if they are exposed to humidity the insulation may get damp.

If a unit equipped with an electrical heating element is exposed to humidity, the risk for earth fault occurs.

INSTALLATION

Aeron cabin Unit ACU1-F is designed for mounting on the floor, close to a wall or other similar support.
All the mounting must be done according to Aeron procedure.

ELECTRICAL CONNECTION

This applies only for cabin units with an electrical heating element.
Power supply; 1 ph 230V AC
The electrical heating element must be interlocked to a running signal from the air handling unit.

Cabin units equipped with electrical heating elements have an Overheat thermostat and a Fire Thermostat.
The overheat thermostat are fixed at 60°C with automatic reset
The fire thermostat are fixed at 110°C with manual reset. The manual reset is described in a separate procedure.

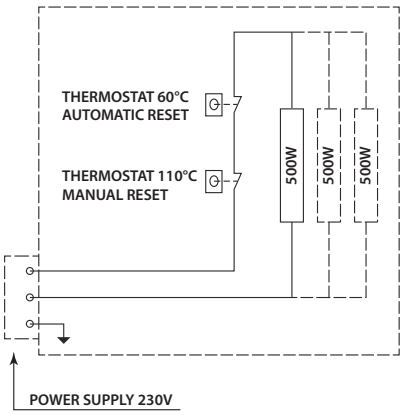

Right to alterations reserved

AIR FLOW RATE MEASUREMENT

The airflow to be measured by an anemometer at top grille or in duct below the wall unit.

NOISE LEVELS

Diagram 1 give total pressure loss as function of air flow rate. The dB(A)-curves represent noise from outlet including diffuser -
expressed by sound pressure levels at 4 dB sound absorption in all frequencies. All data are measured in accordance with ISO 5135.

Table 2 gives factors to be added to the diagram dB(A)-value in order to calculate octave band sound power levels from the unit. The factors are to be interpolated between left and right lines in the diagrams (heavy throttled and open unit).

	Left end of noise curves (heavy throttled) (heavy throttled)							Right end of noise curves (open unit) (open unit)						
Hz	125	250	500	1k	2k	4k	8k	125	250	500	1k	2k	4k	8k
ACU1–50F	-2	-4	-4	-9	-7	0	0	6	4	4	-4	-8	-8	-13

Table 2, factors for calculating octave band sound power levels

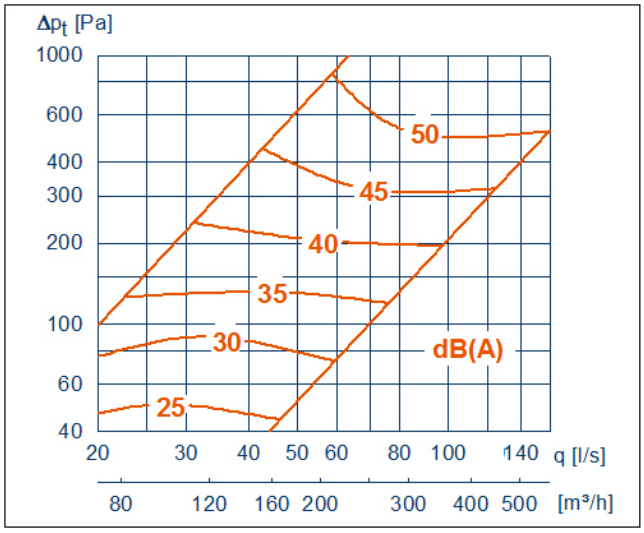

Diagram 1, ACU1-50F

SOUND ATTENUATION

Table 3 gives sound transmission loss defined as reduction in sound power level (dB) propagated from the inlet duct into a cabin due to the insertion of the cabin unit and diffuser. The end reflection loss is included. The values are valid for open damper and are measured in accordance with ISO 7235/ NT ACOU 105.

Hz	125	250	500	1k	2k	4k	8k
ACU1–50F	17	18	19	28	27	24	15

Table 3, sound attenuation

Right to alterations reserved